REVISION	DESCRIPTION	DATE
-	INITIAL RELEASE	3/17/2022

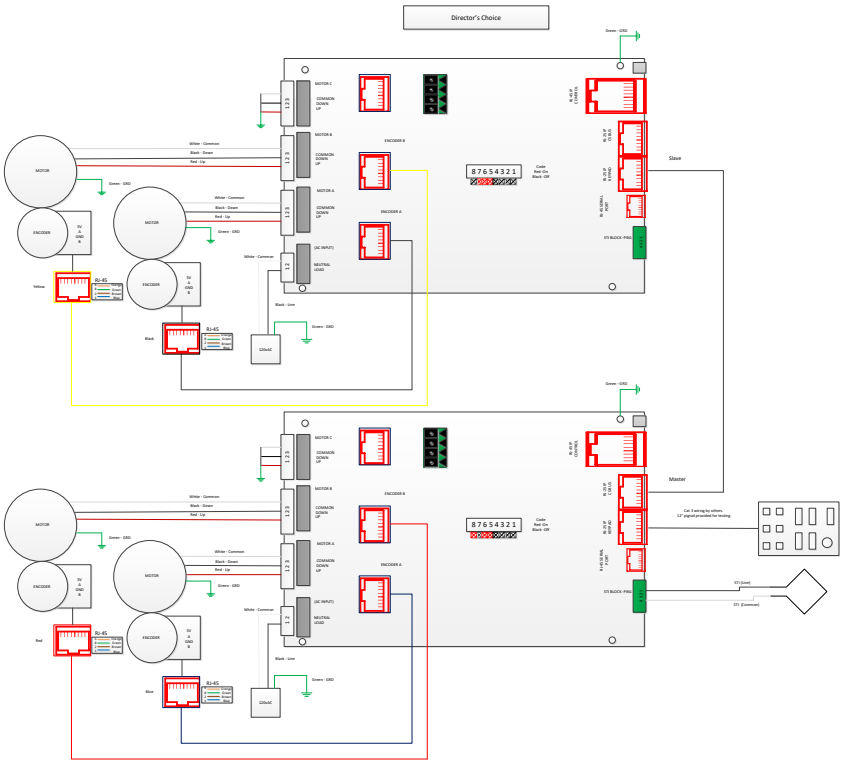

Stewart FILMSCREEN
1161 West Sepulveda., Torrance, California 90502
Office: (310) 784 - 5300 Customer Care (800) 762-4999
Fax (310) 326-6870

RESTRICTION: The information contained in this drawing is confidential and proprietary to Stewart Filmscreen Corporation. It shall not be disclosed beyond the client company, and shall not be duplicated, used, or disclosed in whole or in part for any purpose except to evaluate this proposal.

UNLESS OTHERWISE SPECIFIED	X / X	.XX	.XXX	ANGLE	APPROVAL	DATE	ASSEMBLY
	1/8	.03	.005	±1°	DRAWN AC	3/23/2022	DESCRIPTION
DIMS ARE IN INCHES	MACHINED FILLETS .015 - .030				CHECKED		CVM CONTROL SYSTEM, DC, DC EVO
REMOVE ALL BURRS AND BREAK SHARP EDGES					APROVED		
	SCALE 1:1				SHEET 3 OF 3	SIZE A	PART / MODEL# 03410

D:\Taneleen\Diagrams\Wiring Diagrams\03410\03410